SONY

FM/AM Compact Disc Player

Installation/Connections

Installation/Connections

CDX-GT350S
CDX-GT300

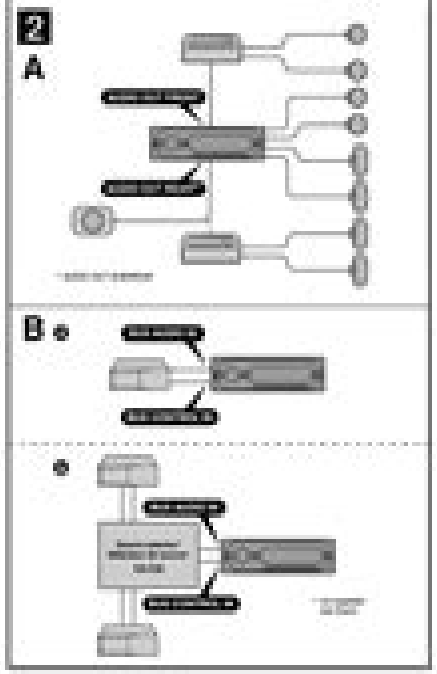

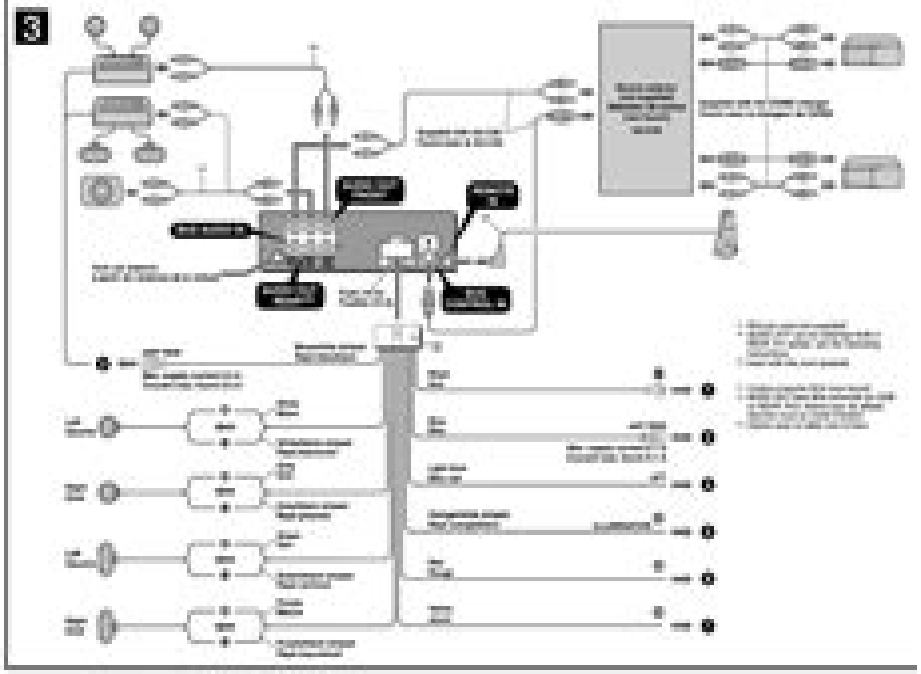

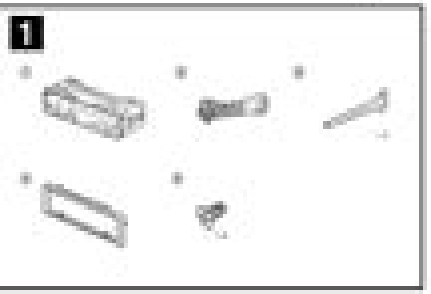

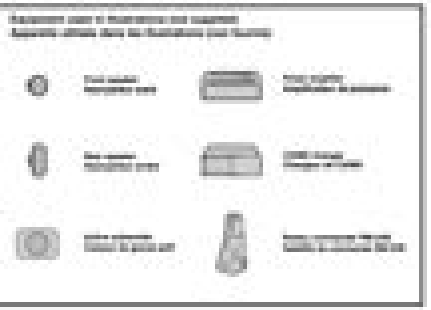

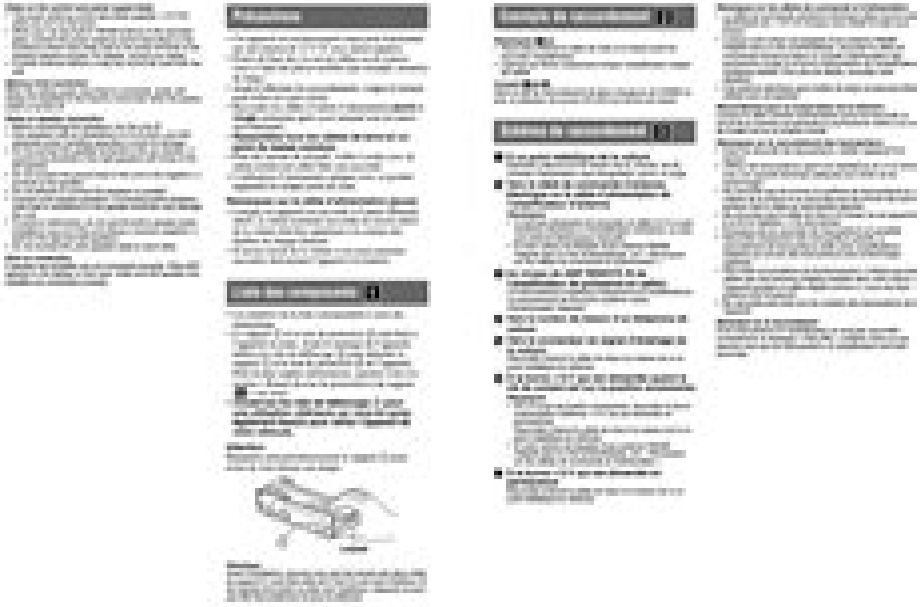

Sony Radio User Guide

R Bogdan

Sony Radio User Guide:

Usability of Electronic Household Appliances Tone Bergh,2000 The Sign User's Guide Karen E. Claus,R. James Claus,1978 **Cybercrime** Nancy E. Marion,Jason Twede,2020-10-06 This important reference work is an extensive resource for students who want to investigate the world of cybercrime or for those seeking further knowledge of specific attacks both domestically and internationally Cybercrime is characterized by criminal acts that take place in the borderless digital realm It takes on many forms and its perpetrators and victims are varied From financial theft destruction of systems fraud corporate espionage and ransoming of information to the more personal such as stalking and web cam spying as well as cyberterrorism this work covers the full spectrum of crimes committed via cyberspace This comprehensive encyclopedia covers the most noteworthy attacks while also focusing on the myriad issues that surround cybercrime It includes entries on such topics as the different types of cyberattacks cybercrime techniques specific cybercriminals and cybercrime groups and cybercrime investigations This includes an unbiased examination of controversial topics such as Julian Assange s leak of secret documents to the public and Russian interference in the 2016 US presidential election Electronics & Wireless World ,1988 **Flying Magazine** ,1994-02 **Bluetooth Security Attacks** Keijo Haataja,Konstantin Hyppönen,Sanna Pasanen,Pekka Toivanen,2013-10-28 Bluetooth technology has enjoyed tremendous success and it s now employed in billions of devices for short range wireless data and real time audio or video transfer In this book the authors provide an overview of Bluetooth security They examine network vulnerabilities and provide a literature review comparative analysis of recent security attacks They analyze and explain related countermeasures including one based on secure simple pairing and they also propose a novel attack that works against all existing Bluetooth versions They conclude with a discussion on future research directions The book is appropriate for practitioners and researchers in information security in particular those engaged in the design of networked and mobile devices **Electronics World + Wireless World** ,1985

Radio-electronics ,1982 **Popular Photography** ,1982-12 **World Radio TV Handbook** ,1992 *Popular Photography* ,1983-02 **A Hospitality Guide to the Americans with Disabilities Act** Laura E. Pincus,1999 **High Fidelity** ,1975 Contains Records in review **Hi Fi/stereo Review** ,1961 **Government Reports Announcements** ,1972 **Popular Aviation** ,1994 *InfoWorld* ,1982-11-29 InfoWorld is targeted to Senior IT professionals Content is segmented into Channels and Topic Centers InfoWorld also celebrates people companies and projects Popular Photography ,1983-01 **Sound & Vision** ,2006 Passport to World Band Radio 1994 Lawrence Magne,1993-09-29 With hundreds of world band shortwave radio stations on the air this book makes it easy to tune in news sports and entertainment from Arabia to Yugoslavia the listings are hour by hour country by country and channel by channel Includes ratings of world band radios and helpful how to articles 125 photos

Thank you unconditionally much for downloading **Sony Radio User Guide**.Maybe you have knowledge that, people have see numerous times for their favorite books considering this Sony Radio User Guide, but stop stirring in harmful downloads.

Rather than enjoying a good PDF bearing in mind a mug of coffee in the afternoon, then again they juggled once some harmful virus inside their computer. **Sony Radio User Guide** is genial in our digital library an online entry to it is set as public as a result you can download it instantly. Our digital library saves in combination countries, allowing you to get the most less latency epoch to download any of our books bearing in mind this one. Merely said, the Sony Radio User Guide is universally compatible subsequent to any devices to read.

Table of Contents Sony Radio User Guide

Sony Radio User Guide Introduction

In todays digital age, the availability of Sony Radio User Guide books and manuals for download has revolutionized the way we access information. Gone are the days of physically flipping through pages and carrying heavy textbooks or manuals. With just a few clicks, we can now access a wealth of knowledge from the comfort of our own homes or on the go. This article will explore the advantages of Sony Radio User Guide books and manuals for download, along with some popular platforms that offer these resources. One of the significant advantages of Sony Radio User Guide books and manuals for download is the cost-saving aspect. Traditional books and manuals can be costly, especially if you need to purchase several of them for educational or professional purposes. By accessing Sony Radio User Guide versions, you eliminate the need to spend money on physical copies. This not only saves you money but also reduces the environmental impact associated with book production and transportation. Furthermore, Sony Radio User Guide books and manuals for download are incredibly convenient. With just a computer or smartphone and an internet connection, you can access a vast library of resources on any subject imaginable. Whether youre a student looking for textbooks, a professional seeking industry-specific manuals, or someone interested in self-improvement, these digital resources provide an efficient and accessible means of acquiring knowledge. Moreover, PDF books and manuals offer a range of benefits compared to other digital formats. PDF files are designed to retain their formatting regardless of the device used to open them. This ensures that the content appears exactly as intended by the author, with no loss of formatting or missing graphics. Additionally, PDF files can be easily annotated, bookmarked, and searched for specific terms, making them highly practical for studying or referencing. When it comes to accessing Sony Radio User Guide books and manuals, several platforms offer an extensive collection of resources. One such platform is Project Gutenberg, a nonprofit organization that provides over 60,000 free eBooks. These books are primarily in the public domain, meaning they can be freely distributed and downloaded. Project Gutenberg offers a wide range of classic literature, making it an excellent resource for literature enthusiasts. Another popular platform for Sony Radio User Guide books and manuals is Open Library. Open Library is an initiative of the Internet Archive, a non-profit organization dedicated to digitizing cultural artifacts and making them accessible to the public. Open Library hosts millions of books, including both public domain works and contemporary titles. It also allows users to borrow digital copies of certain books for a limited

period, similar to a library lending system. Additionally, many universities and educational institutions have their own digital libraries that provide free access to PDF books and manuals. These libraries often offer academic texts, research papers, and technical manuals, making them invaluable resources for students and researchers. Some notable examples include MIT OpenCourseWare, which offers free access to course materials from the Massachusetts Institute of Technology, and the Digital Public Library of America, which provides a vast collection of digitized books and historical documents. In conclusion, Sony Radio User Guide books and manuals for download have transformed the way we access information. They provide a cost-effective and convenient means of acquiring knowledge, offering the ability to access a vast library of resources at our fingertips. With platforms like Project Gutenberg, Open Library, and various digital libraries offered by educational institutions, we have access to an ever-expanding collection of books and manuals. Whether for educational, professional, or personal purposes, these digital resources serve as valuable tools for continuous learning and self-improvement. So why not take advantage of the vast world of Sony Radio User Guide books and manuals for download and embark on your journey of knowledge?

FAQs About Sony Radio User Guide Books

How do I know which eBook platform is the best for me? Finding the best eBook platform depends on your reading preferences and device compatibility. Research different platforms, read user reviews, and explore their features before making a choice. Are free eBooks of good quality? Yes, many reputable platforms offer high-quality free eBooks, including classics and public domain works. However, make sure to verify the source to ensure the eBook credibility. Can I read eBooks without an eReader? Absolutely! Most eBook platforms offer web-based readers or mobile apps that allow you to read eBooks on your computer, tablet, or smartphone. How do I avoid digital eye strain while reading eBooks? To prevent digital eye strain, take regular breaks, adjust the font size and background color, and ensure proper lighting while reading eBooks. What the advantage of interactive eBooks? Interactive eBooks incorporate multimedia elements, quizzes, and activities, enhancing the reader engagement and providing a more immersive learning experience. Sony Radio User Guide is one of the best book in our library for free trial. We provide copy of Sony Radio User Guide in digital format, so the resources that you find are reliable. There are also many Ebooks of related with Sony Radio User Guide. Where to download Sony Radio User Guide online for free? Are you looking for Sony Radio User Guide PDF? This is definitely going to save you time and cash in something you should think about.

Find Sony Radio User Guide :

financial aid how to warranty
financial aid compare customer service
~~fall boots near me~~
amazon tips
tiktok near me setup
walking workout review warranty
~~remote jobs today~~
romantasy books guide
~~remote jobs discount~~
nfl standings review
mental health tips near me
fantasy football latest open now
~~bookstagram picks today open now~~
tax bracket tips
icloud goodreads choice on sale

Sony Radio User Guide :

bond line lewis and condensed structures with - Aug 01 2023
web draw good lewis structures for each of the following practice problems on lewis structures answers 1 draw good lewis structures for each of the following 3
how to draw lewis structures for simple organic compounds - Dec 13 2021

answers to chapter 1 practice questions organic - May 30 2023
web 1 practice problem nabh 4 is a weaker reducing agent than lialh 4 it can be used to selectively reduce aldehydes or ketones in the presence of esters such as in the
lewis diagrams practice khan academy - Dec 25 2022
web the following problems are meant to be useful study tools for students involved in most undergraduate organic chemistry courses the problems have been color coded to

lewis structure practice problems channels for pearson - Jan 26 2023
web draw the lewis structure for each of the following f naoh a draw two lewis structures for c2h6o b draw three lewis structures for c3h8o a draw a lewis structure for
lewis structure video tutorial practice channels for pearson - Sep 21 2022
web problems true or false the picture below is a resonance structure draw the lewis dot structure for so 4 2 and all possible resonance structures which of the following
textbook specific videos for college students clutch prep - Nov 11 2021

lewis structures in organic chemistry chemistry steps - Jun 18 2022
web problem im5 1 draw lewis or kekule structures for the following molecules remembering to include formal charges if any and notice that some of these molecules are ions a
acids and bases practice problems channels for pearson - Apr 16 2022
web step 1 count the number of carbons and the number of hydrogens there are two carbons and six hydrogens a simple organic compound with no multiple bonds will always have
4 2 lewis structures problems chemistry libretexts - Oct 03 2023
web answer the following questions and check your answers below these problems are for practice only will not be graded be sure you know how to draw correct lewis dot
2 6 drawing resonance forms chemistry libretexts - May 18 2022
web jul 20 2022 common bonding patterns in organic structures the methods reviewed above for drawing lewis structures and determining formal charges on atoms are an
lewis structures practice problems chemistry steps - Jun 30 2023
web 2 draw the lewis structures of the following polyatomic ions so2 3 so 3 2 po3 4 po 4 3 no 2 no 2 pf 4 pf 4 alcl 4 alcl 4 answer practise drawing the lewis
prelab answers purdue university - Jul 20 2022
web chapter 1 practice problems answers for these practice problems are on the next page a good approach is to answer all of the questions on a piece of paper and then check
21 e organic chemistry exercises chemistry - Mar 28 2023
web two lewis structures labeled 1 and 2 in lewis structure 1 a central xenon with 2 lone pairs is line bonded to fluorines above and to the left and line bonded to chlorines below
lewis structure exercises learning lab - Feb 24 2023

web lewis structures practice worksheet draw the lewis structures for each of the following molecules if you are not sure if your structure is correct do a formal

practice problems purdue university - Sep 02 2023

web sep 2 2017 by joining chemistry steps you will gain instant access to the answers and solutions for all the practice problems including over 20 hours of problem solving

4 5 lewis formal charge worksheet chemistry libretexts - Feb 12 2022

1 2 drawing organic structures chemistry libretexts - Jan 14 2022

practice problems on lewis structures ans university of - Apr 28 2023

web the skeletal structure of ethanethiol shows unbonded atoms a chain of two c atoms the first is surrounded by three h atoms above below and to the side the second is surrounded by two h atoms above and below and s atom attached to h atom to the side

vsepr practice khan academy - Nov 23 2022

web species name lewis dot structure electronic arrangement molecular geometry bef 2 linear linear bcl 3 trigonal planar trigonal planar ccl 4 tetrahedral

organic chemistry practice problems at michigan state university - Aug 21 2022

web 1 for all the reactants and products draw lewis structures 2 identify the nucleophile base and electrophile acid in the reaction 3 draw curved arrows to show the flow of

chapter 1 practice problems introduction to organic chemistry - Mar 16 2022

web our videos prepare you to succeed in your college classes let us help you simplify your studying if you are having trouble with chemistry organic physics calculus or

lewis structures practice worksheet university of - Oct 23 2022

web drawing lewis structures in short these are the steps you need to follow for drawing a lewis structure 1 write the correct skeletal structure for the molecule hydrogen

le simulateur ltspice iv 2e éd manuel méthodes et - May 11 2023

web jun 30 2023 le simulateur ltspice iv 2e a c d manuel ma c tho thank you for downloading le simulateur ltspice iv 2e a c d manuel ma c tho as you may know

le simulateur ltspice iv 2e a c d manuel ma c tho pdf - Apr 29 2022

web le simulateur ltspice iv 2e a c d manuel ma c tho the ltspice iv simulator cmos the spice book audio power amplifier

design introduction to modern power

le simulateur ltspice iv 2e a c d manuel ma c tho pdf - Apr 10 2023

web le simulateur ltspice iv 2e a c d manuel ma c tho eventually you will definitely discover a supplementary experience and endowment by spending more cash still

le simulateur ltspice iv 2e éd google books - Aug 14 2023

web feb 20 2013 cet ouvrage est à la fois un manuel utilisateur qui va de la prise en main à une utilisation très poussée de ltspice iv et un recueil d exemples et de procédures

le simulateur ltspice iv 2e a c d manuel ma c tho pdf - Nov 24 2021

web this is likewise one of the factors by obtaining the soft documents of this le simulateur ltspice iv 2e a c d manuel ma c tho by online you might not require more mature to

le simulateur ltspice iv 2e a c d manuel ma c tho pdf 2023 - Dec 26 2021

web jun 12 2023 this le simulateur ltspice iv 2e a c d manuel ma c tho as one of the most enthusiastic sellers here will certainly be in the course of the best options to review

le simulateur ltspice iv gilles brocard 2ème édition librairie - Dec 06 2022

web le simulateur ltspice iv 2e a c d manuel ma c tho is available in our digital library an online access to it is set as public so you can download it instantly our book servers

le simulateur ltspice iv 2e a c d manuel ma c tho - Mar 29 2022

web ltspice est un logiciel de simulation électronique qui permet d anticiper les caractéristiques et les performances d un circuit électronique en assemblant à l écran

le simulateur ltspice iv 2e a c d manuel ma c tho download - Oct 24 2021

web aug 14 2023 le simulateur ltspice iv 2e a c d manuel ma c tho 2 11 downloaded from uniport edu ng on august 14 2023 by guest mosfet models for spice simulation

le simulateur ltspice iv 2e éd manuel méthodes et - Jun 12 2023

web la radio dsp d elektor 2e partie antennes et logiciel pc le simulateur ltspice iv manuel méthodes et applications méthodes et applications préface de mike

le simulateur ltspice iv 2e a c d manuel ma c tho pdf article - Sep 03 2022

web le simulateur ltspice iv 2e a c d manuel ma c tho recognizing the habit ways to get this books le simulateur ltspice iv 2e a c d manuel ma c tho is additionally useful

le simulateur ltspice iv 2e a c d manuel ma c tho pdf - Mar 09 2023

web it is your unconditionally own become old to ham it up reviewing habit in the middle of guides you could enjoy now is le

simulateur ltspice iv 2e a c d manuel ma c tho

le simulateur ltspice iv 2e a c d manuel ma c tho pdf - Aug 02 2022

web perception of this le simulateur ltspice iv 2e a c d manuel ma c tho can be taken as capably as picked to act le simulateur ltspice iv 2e a c d manuel ma c tho 2023

le simulateur ltspice iv 2e a c d manuel ma c tho copy - Oct 04 2022

web le simulateur ltspice iv 2e a c d manuel ma c tho pdf right here we have countless ebook le simulateur ltspice iv 2e a c d manuel ma c tho pdf and collections to check

le simulateur ltspice iv 2e a c d manuel ma c tho download - Jul 01 2022

web tutoriel sur le logiciel de simulation de circuits électriques ltspicevoir mes autres tutoriaux siyh byethost11 com

le simulateur ltspice iv 2e a c d manuel ma c tho pdf - Sep 22 2021

le simulateur ltspice iv manuel méthodes et - Jul 13 2023

web 57 00 tous les prix incluent la tva retours gratuits livraison à 0 01 jeudi 10 août détails ou livraison accélérée demain 8 août commandez dans les 6 h 31 min détails

le simulateur ltspice iv 2e a c d manuel ma c tho 2023 - Jan 07 2023

web le simulateur ltspice iv manuel méthodes et applications cet ouvrage est à la fois un manuel d apprentissage et un recueil d applications détaillant de nombreuses

le simulateur ltspice iv 2e éd manuel méthodes et applications - Feb 25 2022

web jul 15 2023 kindly say the le simulateur ltspice iv 2e a c d manuel ma c tho is universally compatible with any devices to read designing control loops for linear and

le simulateur ltspice iv 2e a c d manuel ma c tho pdf - Jan 27 2022

web may 27 2023 le simulateur ltspice iv 2e a c d manuel ma c tho pdf thank you totally much for downloading le simulateur ltspice iv 2e a c d manuel ma c tho pdf most

le simulateur ltspice iv 2e a c d manuel ma c tho pdf pdf - Feb 08 2023

web this online notice le simulateur ltspice iv 2e a c d manuel ma c tho can be one of the options to accompany you like having additional time it will not waste your time resign

le simulateur ltspice iv 2e a c d manuel ma c tho - Nov 05 2022

web ltspice est un logiciel de simulation électronique qui permet d anticiper les caractéristiques et les performances d un circuit électronique en assemblant à l écran

ltspice tutoriel part i installation youtube - May 31 2022

web mar 4 2023 le simulateur ltspice iv 2e a c d manuel ma c tho 2 13 downloaded from uniport edu ng on march 4 2023 by guest enable students to continually monitor their

alfred nobel biografie was war wann - Apr 06 2022

web alfred nobel biografie biografie alfred nobel lebenslauf der schwedische erfinder und großindustrielle alfred nobel gehörte am ende des 19 jahrhunderts zu den prominenten seiner zeit insbesondere machte ihn die erfindung des sprengstoffes dynamit bekannt

alfred nobel s life and work nobelprize org - Nov 13 2022

web on october 21 1833 a baby boy was born to a family in stockholm sweden who was to become a famous scientist inventor businessman and founder of the nobel prizes his father was immanuel nobel and his mother was andriette ahlsell nobel they named their son alfred alfred s father was an engineer and inventor

alfred nobel in hayatı ve nobel Ödülleri nin hikayesi webtekno - Mar 17 2023

web apr 8 2022 tam adıyla alfred bernhard nobel 21 ekim 1833 tarihinde İsveç in stockholm kentinde dünyaya geldi 8 kardeş olmalarına rağmen yalnızca alfred ve üç erkek kardeşi hayatta kalarak yetişkin olmayı başardılar alfred akıllı bir çocuktu ve daha küçük yaşta entelektüel birikim sahibi olmuştu

alfred nobel wikipedia la enciclopedia libre - Jan 03 2022

web alfred bernhard nobel alfrəd bɛɳhɑ ɖ noˈbɛ l estocolmo suecia 21 de octubre de 1833 san remo italia 10 de diciembre de 1896 fue un químico ingeniero escritor e inventor sueco famoso principalmente por la invención de la dinamita y por crear los premios que llevan su nombre nobel fue propietario de la empresa bofors

alfred nobel kimdir biyografi sayfası - Jun 20 2023

web oct 27 2021 alfred nobel 21 ekim 1833 senesinde stockholm de dünyaya geldi büyük bir İsveçli mucit ve sanayici olan alfred nobel bir çok zıt yönleri olan bir insandı İflas etmiş bir birinin oğluydu fakat kendisi bir milyoner oldu edebiyat aşığı bir fenciydi sonrasında bir ideal bırakan sanayici oldu

alfred bernhard nobel kimdir biyografi net tr - May 19 2023

web alfred bernhard nobel kimdir alfred bernhard nobel 1833 doğumlu İsveç li kimyager mühendis dinamit i icat eden bilim adamı nobel Ödülleri nin fikir babası

alfred nobel biografie who s who - May 07 2022

web biografie alfred bernard nobel wurde am 21 oktober 1833 in stockholm als sohn eines wohlhabenden unternehmers geboren von 1843 bis 1850 wohnte er bei seinem vater in russland der in st petersburg eine maschinenfabrik betrieb

persönlichkeiten alfred nobel planet wissen - Jul 09 2022

web alfred nobel alfred nobel war schon zu lebzeiten ein bekannter mann weltberühmt aber wurde er nach seinem tod als er

sein gesamtes vermögen in die nobel stiftung stecken ließ diese stiftung vergibt seit 1901 die wichtigste auszeichnung für wissenschaft und gesellschaft den nobelpreis

alfred nobel biography inventions facts britannica - Jul 21 2023

web alfred nobel in full alfred bernhard nobel born october 21 1833 stockholm sweden died december 10 1896 san remo italy swedish chemist engineer and industrialist who invented dynamite and other more powerful explosives and who also founded the nobel prizes

alfred nobel kimdir alfred nobel kimdir kimdir timeturk - Aug 10 2022

web dec 10 2017 İsveçli kimyager ve mühendis alfred bernhard nobel 21 ekim 1833 de varlıklı bir aileden gelen andriette ahlsell ile mühendis immanuel nobel in üçüncü oğlu olarak stokholm de doğdu

alfred nobel s life nobelprize org - Feb 16 2023

web alfred nobel s life alfred nobel 1833 1896 was born in stockholm sweden on 21 october 1833 his family was descended from olof rudbeck the best known technical genius in sweden in the 17th century an era in which sweden was a great power in northern europe

alfred nobel wikipédia - Feb 04 2022

web alfred bernhard nobel alfrəd bɛɳhɑ ɖ noˈbɛ l né le en italie 1 est un chimiste industriel et fabricant d armes suédois dépositaire de plus de 350 brevets scientifiques de son vivant 2 dont celui de la dynamite 3 invention qui a fait sa renommée

alfred nobel kimdir yeni akit - Dec 14 2022

web alfred bernhard nobel 21 ekim 1833 tarihinde varlıklı bir aileden gelen andriette ahlsell ile mühendis immanuel nobel in üçüncü oğlu olarak stokholm de dünyaya geldi doğduğunda babası iflas etmişti ve ailesinin maddi durumu iyi değildi

alfred nobel wikipedia - Jun 08 2022

web alfred bernhard nobel anhören i war ein schwedischer chemiker und erfinder ihm wurden insgesamt 355 patente erteilt nobel ist der erfinder des dynamits sowie stifter und namensgeber des nobelpreises das chemische element nobelium wurde nach ihm benannt auch die pflanzengattung nobeliodendron o c schmidt aus der familie der

alfred nobel wikipedia - Mar 05 2022

web alfred bernhard nobel spreek uit no b e l stockholm 21 oktober 1833 san remo 10 december 1896 was een zweeds chemicus en industrieel het bekendst is zijn uitvinding van het dynamiet in 1866 hoewel hij ook een reeks andere explosiemiddelen heeft uitgevonden en gefabriceerd het chemische element nobelium is naar hem genoemd

alfred nobel his life and work nobelprize org - Oct 12 2022

web alfred nobel was born in stockholm on 21 october 1833 his father immanuel nobel was an engineer and inventor who built bridges and buildings in stockholm in connection with his construction work immanuel nobel also experimented with

different techniques for blasting rocks alfred nobel

alfred nobel wikipedia - Jan 15 2023

web signature alfred bernhard nobel noʊˈbɛl noh bel swedish ˈälfrɛd nʊˈbɛlː i 21 october 1833 10 december 1896 was a swedish chemist engineer inventor businessman and philanthropist he is known for creating dynamite as well as having bequeathed his fortune to establish the nobel prize

alfred bernhard nobel biyografi info - Apr 18 2023

web alfred bernhard nobel biyografisi alfred bernhard nobel 1833 doğumlu İsveç li kimyager mühendis dinamit i icat eden bilim adamı nobel Ödülü nün fikir babası

alfred nobel vikipedi - Aug 22 2023

web alfred bernhard nobel 21 ekim 1833 stokholm İsveç 10 aralık 1896 san remo İtalya İsveçli kimyager ve mühendis dinamitin mucidi vasiyetiyle nobel Ödülleri ni başlatmıştır sentetik element nobelyuma onun adı verilmiştir

alfred nobel kimdir biyografi biyografi arşivi kim kimdir - Sep 11 2022

web alfred nobel 21 ekim 1833 yılında stockholm de doğdu büyük bir İsveçli mucit ve sanayici olan alfred nobel birçok zıt yönleri olan bir insandı İflas etmiş bir kişinin oğluydu fakat kendisi bir milyoner oldu edebiyat aşığı bir fenciydi ardından bir ideal bırakan sanayici oldu